# 24TH-Series Threadless Hanger

## QUICK. CLEAN. EFFICIENT.

The 24TH-series threadless hanger from Dixon® Sanitary introduces a new level of efficiency and hygienic design to the hanger market.

This tube hanger incorporates a snap-secure latch system that simplifies and significantly reduces installation times by eliminating the standard thread design. The snap-in clips guide and protect your tubing.

### Applications
- Mounted processing lines
- Skid building

### Sizes
- 1”, 1-1/2”, 2”, 3”, 4”

### Features
- Partial open position allows for adjustment of tubing prior to final lock in
- Threadless design and bacteria-resistant architecture
- The snap-in clip assembly makes this hanger easy to assemble
  - Optionally compatible with our standard sleeve (clips removed)
- Save time on installation with no tools needed
- Meets MSS SP-58 load ratings

### Specifications
- Mounting: compatible with up to 3/4” diameter rod
- Materials of construction
  - Top and bottom halves and latch: 304 stainless steel
  - Hook: 304 stainless steel spring wire
  - Clips: polypropylene
  - Sleeve: polypropylene

**Polypropylene Clips**

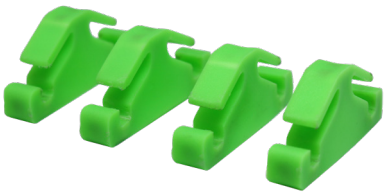

**Polypropylene Sleeve**

NOTE: The polypropylene clips and sleeve are not to be used together

The Right Connection®

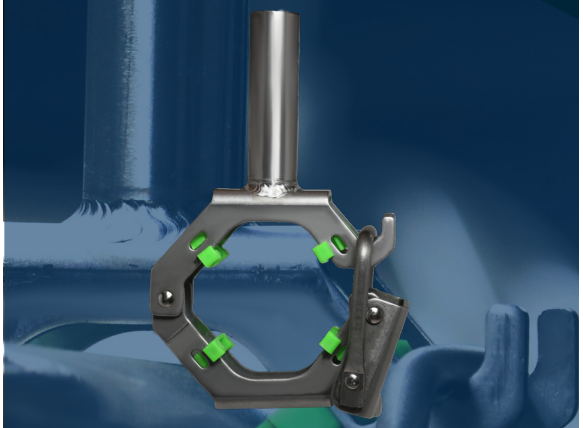

**Clip Style in Closed Position**

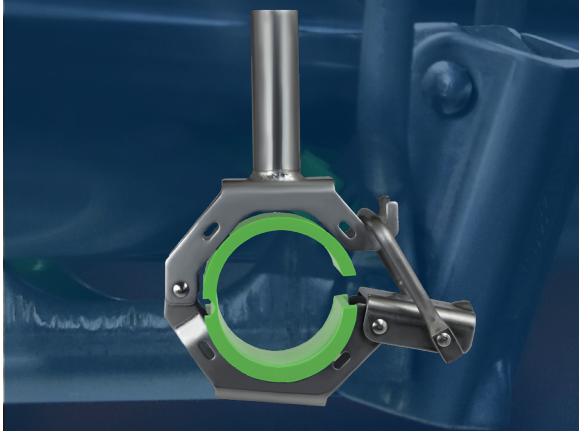

**Sleeve Style in Partial Open Position**


## Dixon Sanitary

N25 W23040 Paul Road
Pewaukee, WI 53072
ph: 800.789.1718
fx: 800.789.4046
**dixonvalve.com**

The Right Connection®

## Dimensions

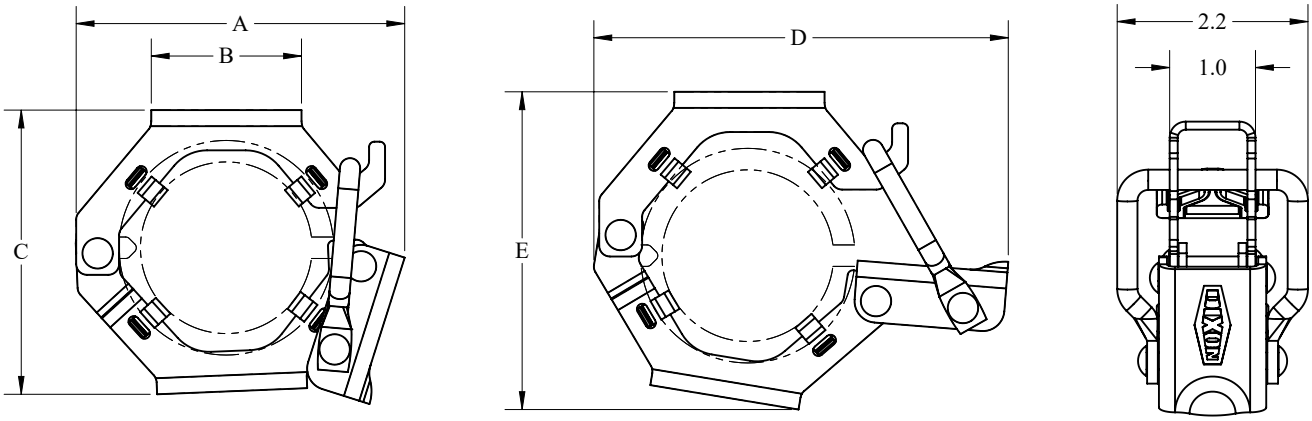


| Size | A (in) | B (in) | C (in) | D (in) | E (in) |
|---|---|---|---|---|---|
| 1" | 2.9 | 1.0 | 3.2 | 4.0 | 3.5 |
| 1-1/2" | 3.4 | 1.6 | 3.2 | 4.4 | 3.5 |
| 2" | 3.8 | 1.8 | 3.3 | 4.8 | 3.7 |
| 3" | 5.0 | 1.8 | 4.7 | 6.0 | 5.0 |
| 4" | 6.1 | 2.3 | 5.8 | 7.1 | 6.2 |

## 24TH-Series Threadless Hanger - Part Number Key

| 24TH-Series Threadless Hanger Part Number Key Example: 24THP10 | | Series | Insert | Size |
|---|---|---|---|---|
| | | 24TH | P | 10 |
| **Series** | **Code** | | | |
| 24TH | 24TH | | | |
| **Inserts** | **Code** | | | |
| Polypropylene clips (4 pcs) | P | | | |
| Polypropylene sleeve (1 pc) | S | | | |
| **Size** | **Code** | | | |
| 1" | 10 | | | |
| 1-1/2" | 15 | | | |
| 2" | 20 | | | |
| 3" | 30 | | | |
| 4" | 40 | | | |

## 24TH-Series Accessories - Part Numbers

| Tubing/Hanger Size | Clip Part Number (qty 4) | Sleeve Part Number (qty 1) |
|---|---|---|
| 1" | 24TH-PC | 24TH-PS-100 |
| 1-1/2" | | 24TH-PS-150 |
| 2" | | 24TH-PS-200 |
| 3" | | 24TH-PS-300 |
| 4" | | 24TH-PS-400 |

© 2024 DVCC • DS24TH_1024